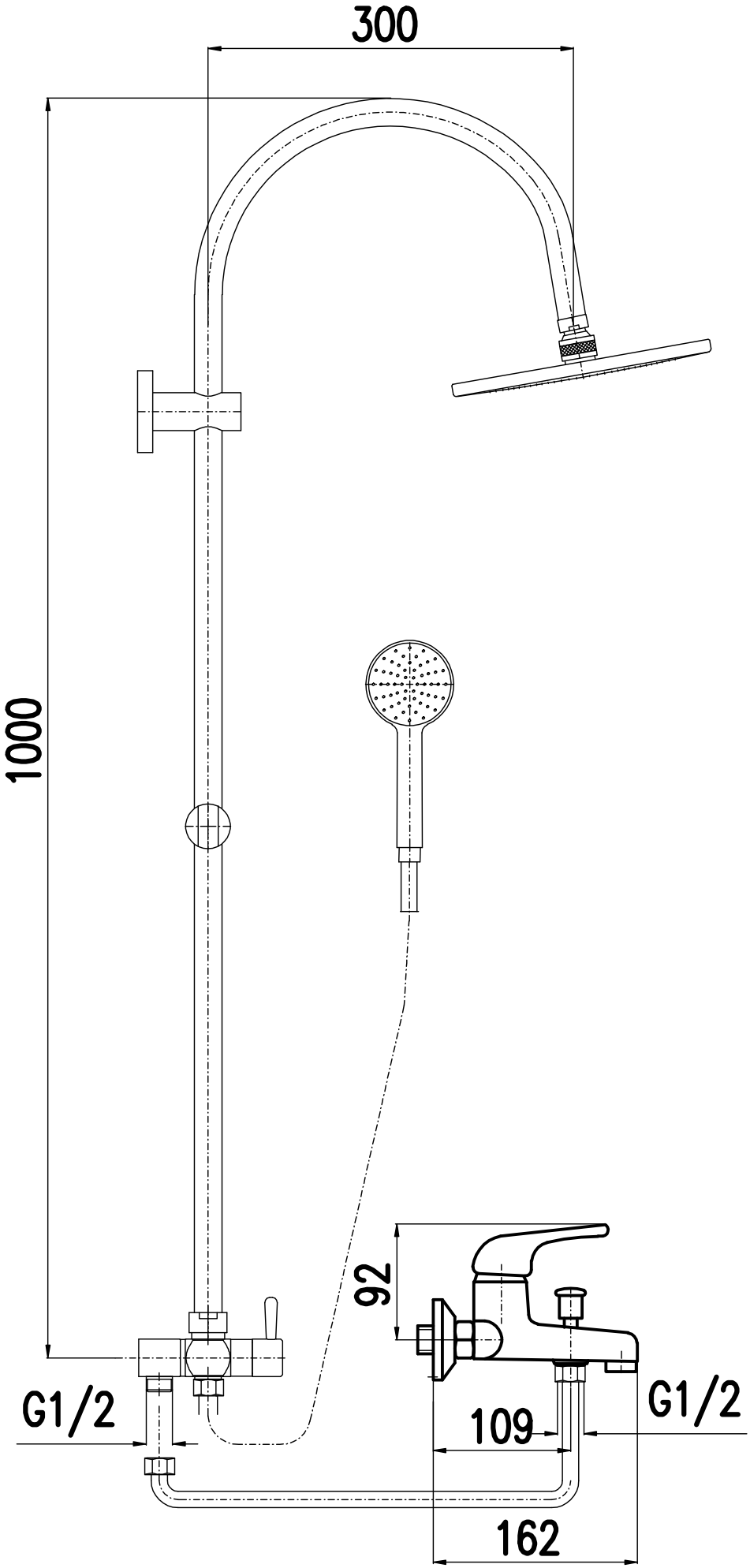
300
1000
92
G1/2
109
G1/2
162