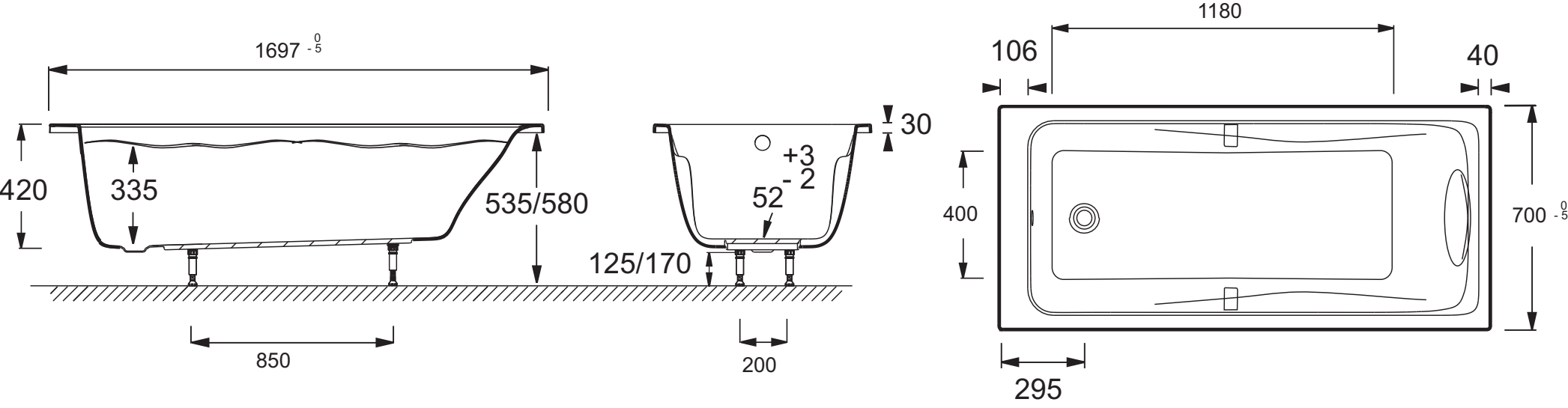
1697 0 -5
420
335
535/580
850
30
+3
- 2
52
125/170
200
1180
106
40
400
700 0 -5
295